84 PCS M38 - B0680A

COLOUR

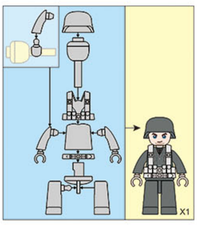

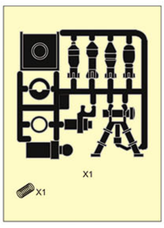

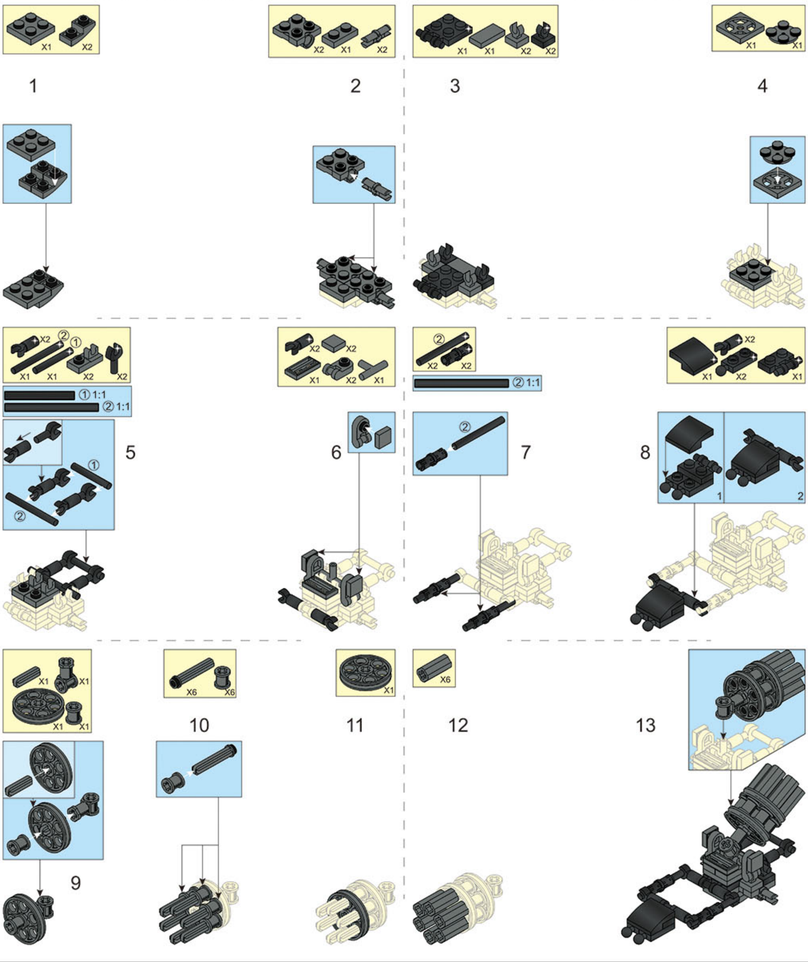

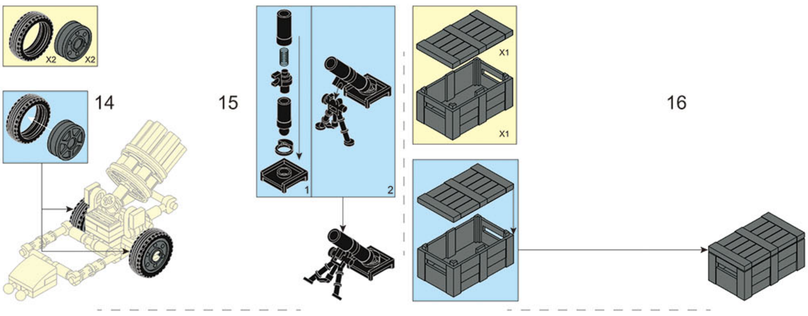

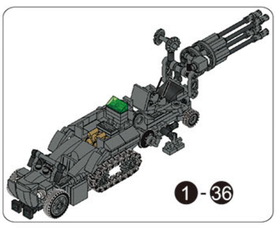

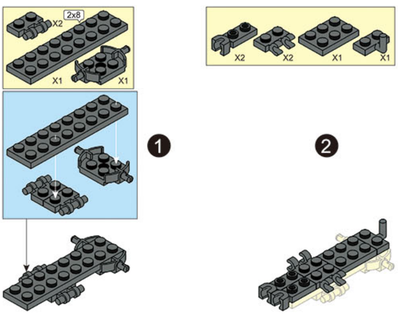

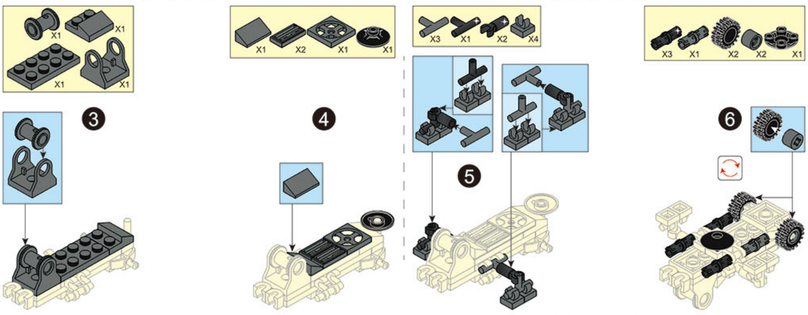

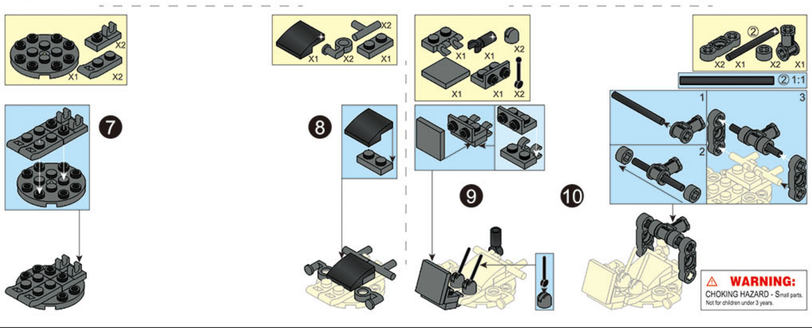

WARNING:
CHOKING HAZARD - Small parts.
Not for children under 3 years.